Dot Graphic VFD Module GU160X32-8400

- 160 x 32 Dot Graphic
- ASCII + Simplified Chinese 16x16 Font
- Operating Temp -40°C to +85°C
- Single 5V Supply.
- Selectable Parallel (i80/M68)/Serial Interface
- Twin Screen Graphic RAM
- 16 Level Brightness Control Function

The module includes the Vacuum Fluorescent Display glass, driver and control ASIC, with integral refresh Graphic RAM and logic for parallel and synchronous serial interfaces. The high speed 8 bit parallel interface is 5V CMOS compatible suitable for connection to a host CPU bus. Brightness control and power down functions are provided. A full data sheet is available.

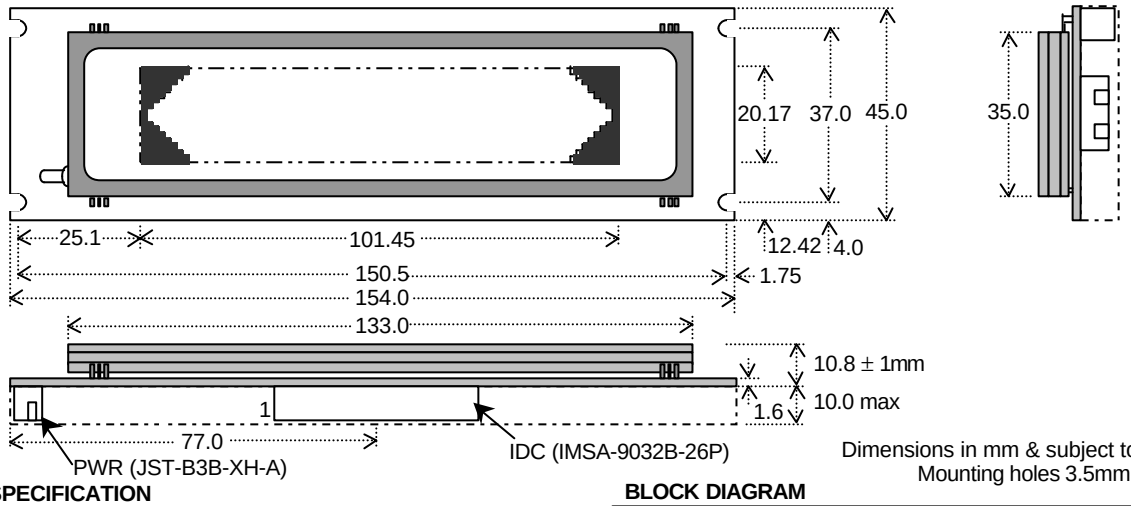

Dimensions in mm & subject to tolerances.
Mounting holes 3.5mm dia.

ELECTRICAL SPECIFICATION

Parameter	Symbol	Value	Condition
Power Supply Voltage	VCC	5.0VDC +/- 5%	GND=0V
Power Supply Current	ICC	550mADC typ.	VCC= 5V
Logic High Input	VIH	4.0 VDC min.	IIH = 2uA
Logic Low Input	VIL	1.0VDC max.	IIL = -600uA
Logic High Output	VOH	4.7VDC min.	IOH = -300uA
Logic Low Output	VOL	0.3 VDC max.	IOL = 300uA
Reset Input Voltage	VRH	4.0 VDC min.	IRH = 5uA
Reset Input Voltage	VRL	0.6 VDC max.	IRL = -600uA

The power on rise time should be less than 100ms.The inrush current at power on can be 2 x ICC.

BLOCK DIAGRAM

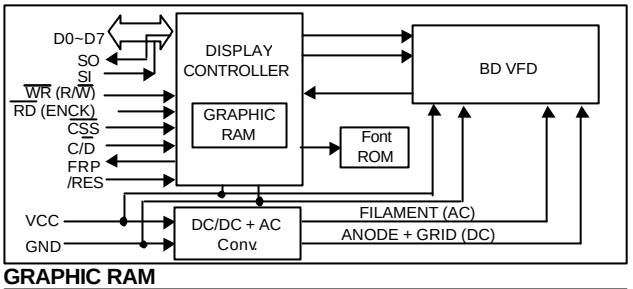

OPTICAL and ENVIRONMENTAL SPECIFICATIONS

Parameter	Value
Display Area (XxY mm)	101.45 x 20.17
Dot Size/Pitch (XxY mm)	0.485 x 0.485/0.635 x 0.635
Luminance	350 cd/m² Min.
Colour of Illumination	Blue-Green (Filter for colours)
Operating Temperature	-40°C to +85°C
Storage Temperature	-40°C to +85°C
Operating Humidity (non condensing)	20 to 80% RH @ 25°C

GRAPHIC RAM

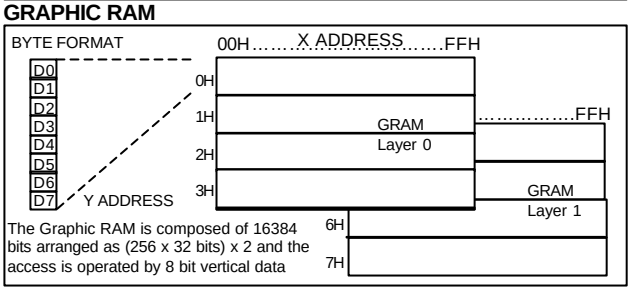

SOFTWARE COMMANDS

Instruction	C/D	Instruction Byte	No. Bytes
Set Display On/Off / Layer Merge	1	20H-2FH	2
Set Display Brightness	1	40H-4FH	1
Display Clear	1	50H-5FH	1
Display Area Set	1	62H-6FH	3
Character Display Address Set	1	68H-6DH	2
Graphic Display X Address Set	1	64H-65H	2
Graphic Display Y Address Set	1	60H-61H	2
Graphic Display Horizontal Shift	1	70H-7FH	2
Graphic Display Vertical Shift	1	B0H-BFH	2
Character Display Horizontal Shift	1	A0H-AEH	2
Character Display Vertical Shift	1	90H-9FH	2
Address Increment	1	80H-8FH	1
Character Display Start Address	1	D8H-DBH	3
Graphic Display Start Address	1	D4H-D7H	3
ROM Data Transfer Set	1	E0H-EFH	3
Write Data	0	00H-FFH	3

SCROLLING GRAPHIC DISPLAY

The pattern in GRAM can be scrolled around the display. Horizontal scroll is achieved by increment/decrement of the Display Start X Address. The vertical scroll process considers layer 0, then layer 1 as a continuous 64 bit high vertical area within RAM.

IDC DATA CONNECTOR

Pin	i80	M68	Serial	Pin	Sig
1	D7	D7	X	2	GND
3	D6	D6	X	4	GND
5	D5	D5	X	6	GND
7	D4	D4	X	8	GND
9	D3	D3	X	10	GND
11	D2	D2	X	12	GND
13	D1	D1	SO	14	GND
15	D0	D0	SI	16	GND
17	/WR	R/W	X	18	GND
19	C//D	C//D	C//D	20	GND
21	/RD	ENCK	SCK	22	GND
23	/CSS	/CSS	/CSS	24	GND
25	FRP	FRP	FRP	26	/RES

3 PIN POWER CONNECTOR

Pin	Sig
1	Vcc
2	Test (Factory only)
3	GND

PCB JUMPERS (O)pen (L)ink

Interface	J1	J2
Serial	L	O / L
i80 Parallel	O	O
M68 Parallel	O	L

CONTACT

Noritake Sales Office Tel Nos
Nagoya Japan: +81 (0)52-561-9867
Canada: +1-416-291-2946
Chicago USA: +1-847-439-9020
Munchen (D): +49 (0)89-3214-290
Itron UK: +44 (0)1493 601144
Rest Europe: +49 (0)61-0520-9220
www.noritake-itron.com

Subject to change without notice.
IUK Doc Ref: 03592 Iss:1 20/9/01